OAP800WG DIN Rail Wireless Gateway with Serial, GPS, WiFi & 2G/3G/4G LTE

The OAP800WG is a ruggedised, DIN rail mountable, 8-Port wireless router for critical infrastructure and industrial applications with zero on-site provisioning, VPN & Firewall capabilities.

The Avara OAP800WG is a family of DIN-rail mountable, 8-port managed wireless router with RS232/RS485 serial ports, GPS and WiFi capabilities that has been specifically designed to provide a compact solution for delivering Ethernet & Serial services in industrial applications.

It provides a routed wireless connections to industrial and process automation equipment located at remote locations.

8x10/100Base-T tributary interfaces are provided which can operate at 10 or 100 Mbps rates. The WiFi interface supports 802.11b/g/n.

GNSS capabilities are provided with support for GPS/QZSS, GLONASS, Galileo & BeiDou satellite systems. Location, time and time pulse functionality are provided.

Additionally, a 2x2 MIMO wireless 4G LTE uplink with dual SIM support is also available providing an ideal solution for connectivity to remote RTU devices, process control equipment, IP cameras and other sensor equipment.

Multi WAN functionality is supported allowing any physical Ethernet port to operate in LAN or WAN mode to provide resilient network connectivity.

The OAP800WG also delivers high performance Layer 2 Ethernet switching in a compact form factor. Tag based VLANs compliant with 802.1q/p are supported allowing network segmentation with traffic prioritisation without being restricted by physical connections.

Serial data interfaces are supported via terminal server functionality. Raw TCP and UDP access is provided on a selectable port allowing seamless access to remotely located field serial devices.

To enhance security, the OAP800WG supports SSH, HTTPS, 802.1x, RADIUS & SNMPv3 together with machine Access Control Lists to ensure that only trusted users and devices gain access to the network.

The OAP800 can be managed locally via the console port or remotely using ASPeCT, SSHv2, Telnet, SNMP or a web browser over a secure VLAN.
VPN technologies are also available to provide secure connections over public networks to ensure daya integrity & confidentiality.

A variant also supports multiple digital I/O to support mini RTU functionality thus providing a cost effective and space optimised solution for providing basic automation functionality.

A range of SW modules are available for the OAP800WG to convert legacy RTU protocols to contemporary protocols such as IEC 60870-5 and IEC 61850. Please refer to relevant product brochures for more detail.

The OAP800WG supports zero on site configuration when used with Avara's ASPeCT NMS by dynamically connecting to a central server to get its running configuration, delivering a true "Plug and Go" solution.

A comprehensive set of SNMP traps and alarms are provided for fault management and isolation. Event logging using Syslog & SNMP traps is also available to support audit trail implementations.

The OAP800WG is a low power device making it an ideal solution for solar powered deployments. The OAP800WG also supports dual power feed functionality to enhance system availability.



P21056.12

Technical Highlights

- 8 x 10/100Base-T
- 1 x RS232 & 1 x RS232/RS485 Async
- 2 x MIMO cellular operation
- Dual SIM Support
- WiFi with 802.11b/g/n support
- Integrated 4G LTE CAT 4 or CAT M1 industrial cellular module
- Multiple Band Support (400, 700, 1800 & 2100MHz)
- 3G UMTS/HSDPA/HSUPA
- 2G GSM/EDGE
- Concurrent reception GNSS with configurable time pulse support
- 8 x Digitial Outputs & 16 x Digital Inputs for Industrial Automation Applications
- 802.1p, 802.1q (4096 VLANs) with Rate Limiting
- MAC Address Allow Lists
- Remote Management via SNMP, Telnet, CLI, Web Server or OAM messages
- SSH, HTTPS, 802.1x, RADIUS & SNMPv3
- VPN (OpenVPN, L2TPv3, IPSec)
- High MTBF
- 10-36 or 20-60 VDC Operation with Dual Power Feeds
- -25°C to +70°C Operation
- Fanless Operation

D20052201D R9

Technical Specifications

Cellular (Cat 4)	
4G LTE	**Cat 4 FDD-LTE (3GPP Rel 9)**
Frequency (MHz)	2100/1800/2600/900/800/700
FDD Bands	B1/B3/B7/B8/B20/B28
TDD Bands	B38/B40/B41
Theo. DS/US Speed	150/50 Mbps
Max. Modulation	64QAM
RF Output Power	Class 3 (23dBm/0.2W)
3G	**UMTS/HSDPA/HSUPA**
Frequency (MHz)	2100/900
Bands	B1/B8
RF Output Power	Class 3 (25dBm/0.32W)
2G	**GSM/EDGE**
Frequency (MHz)	1800/900
Bands	B3/B8
Cellular (Cat-M1)	
4G LTE	
Frequency (MHz)	450/410*
Bands	B31/B72/B73/B87/B88*
MIMO	2 X 2
Connectors	2 x 50 Ohm SMA
	* Roadmap
Enclosure	IP30 protection DIN-Rail mounting
H x D x W	180mm x 107mm x 45mm
H x D x W - 21056.4X	180mm x 107mm x 65mm
GNSS	
Satellite Systems	GPS/QZSS, GLONASS, Galileo, BeiDou
Supported	Configurable: 0.25Hz to 10MHz
Time Pulse Support	< 1ms
Time Pulse Accuracy	
Access Interfaces	
Ethernet	8 x 10/100 Base-T (RJ45)
Ethernet WiFi	2 x 50 Ohm SMA
Serial Data	1 x RS232, 1 x RS232/485 (DB9F)
Management	
Local	CLI via Console RJ45
Remote	SSHv2, SNMP, Web, OAM
Network Access Security	SSH SNMPv1/v2c/v3 802.1x RADIUS HTTP/HTTPS SCP Password Protection Management ACL
Data Interface Security & VPN	MAC Address Locking, Dedicated VLAN Open VPN (SSL) IPSec L2TPv3, GRE
Layer 3 Routing	Static Routing OSPF, RIP v1/v2, BGP NAT Port Forwarding Multiple Routing Tables ACL

Power	
Operating Voltages	.01/11/21/31/41: 20 to 60 VDC .02/12/22/32/42: 10 to 36 VDC
Power Supply Feeds	Dual
Power Consumption	13 W (max)
Digital I/O-All	2 x Ouputs (Relay) 2 x TTL Inputs/Outputs
P21056.4X Only	
Inputs	16
Input Level	OFF: < 3V; ON: > 10V; Max < 50V
Isolation	Optically Isolated, 2kVrms
Outputs	8
Output Type	Open Collector, 100mA max @ 24V
Over-Voltage Prot.	50V
Environmental	
Operating Temperature	-25°C to +70 °C
Relative Humidity	5-90% (Non-condensing)
MTBF	65 years
Protocol Conversion	Available as separate SW modules DNP3 to IEC 60870-5-104 IEC 60870-5-101 to 60870-5-104 MODBUS to 60870-5-104
Layer 2 Switching	
Speed	10/100Base-T
Autonegotiation	Yes
Duplex	Full/Half
MDI/MDIX Support	Yes
IEEE 802.p/q	Yes
Mac Address size	8K
VLANS supported	4096
Rate Limiting	128K, 256K, 512K, 1M, 2M, 4M, 8M
	Strict & Weighted Round Robin
Traffic shaping	
Priority Queues Per Output	4
Time Management	SNTP NTP
Event Logging	Syslog SNMP Traps
Protocols	TCP, UDP, ICMP, PPP, PPPoE, DHCP, DDNS
Standards	EN60950 Safety
RFC1157 SNMP	EN55022 Class A Emissions
RFC1213 MIB II	EN55024 Immunity
RFC854 Telnet	EN50082-2 Generic Immunity
RFC783 TFTP	EN300-386 Telecommunications
RFC2865 RADIUS	EN61000-4-2 ESD
RFC4251 SSHv2	EN61000-4-3 Radiated Sus.
RFC3164 Syslog	EN61000-4-4 EFT
IEEE 802.3	EN61000-4-5 Surge Burst
IEEE 802.1x	EN61000-4-6 Conducted Sus.
IEEE 802.1D	EN60950
IEEE 802.1q	ETS 300 019-1-1 Operational
IEEE 802.1p	ETS 300 019-1-2 Storage
IEEE 802.11/b/g/n	ETS 300 019-1-3 Transport

Technical Specifications

Order Code^	LTE CAT	WiFi	10/100	RS232 RS485	RS232	Digital		Dry Contact Outputs	GPS	GE SFP	Power Feeds
						I	O				
P21056.0X	4	Y	1 x RJ45	1 x DB9	1 x DB9	2		-	-	-	Dual
P21056.1X	4	Y	8 x RJ45	1 x DB9	1 x DB9	2		2	-	-	Dual
P21056.2X	4	Y	8 x RJ45	1 x DB9	1 x DB9	2		2	Y	-	Dual
P21056.3X	4	Y	8 x RJ45	1 x DB9	1 x DB9	2		2	Y	2	Dual
P21056.4X	4	Y	8 x RJ45	1 x DB9	1 x DB9	16	8	2	Y	2	Dual
P21058.1X	M1	-	8 x RJ45	2 x DB9		2		2	-	-	Dual
P21058.3X	M1	-	8 x RJ45	2 x DB9		2		2	-	2	Dual

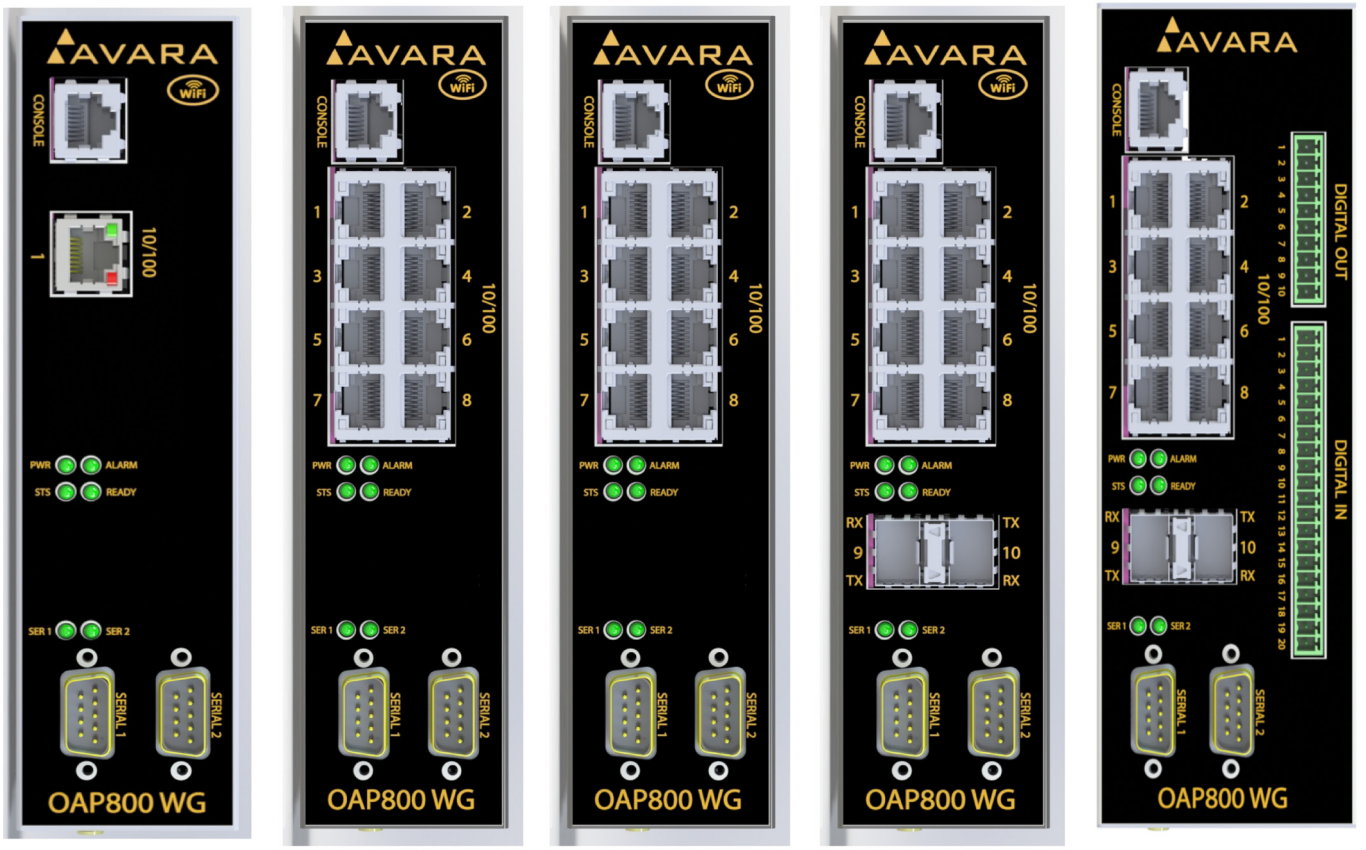



P21056.0X P21056.1X P21056.2X P21056.3X P21056.4X

Technical Specifications





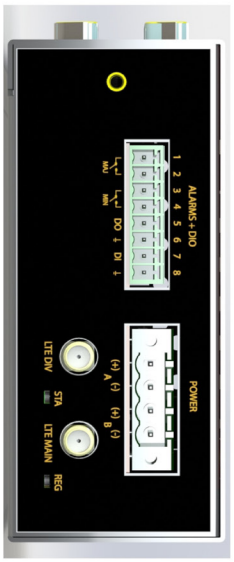

P21058.1X

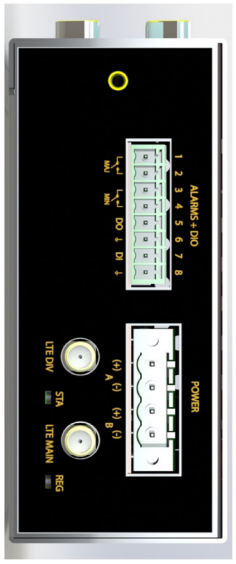

P21058.3X

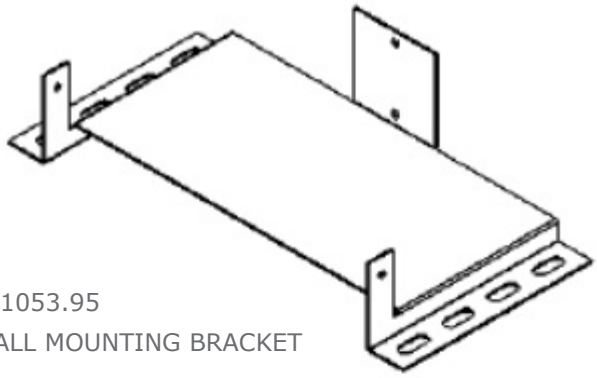

P21053.95
WALL MOUNTING BRACKET

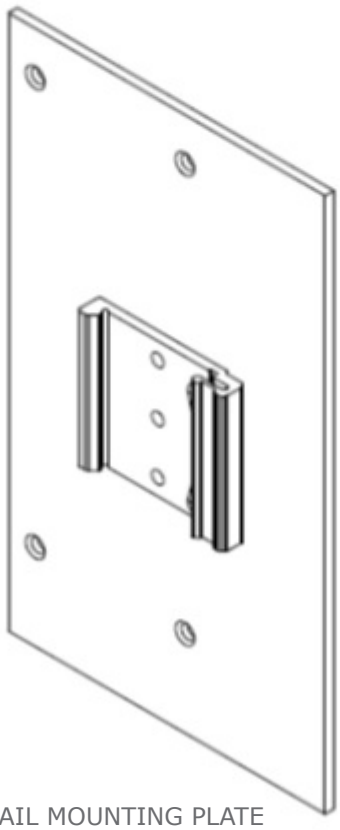

P21053.91
FLAT DIN-RAIL MOUNTING PLATE

Head Office

1/45 Normanby Road
Notting Hill, Victoria 3168
Australia
Tel: +61 3 95400330
Fax:+61 3 99236545

www.avaratechnologies.com

Regional Distributor

Certified System Environment ISO 14001 SAI GLOBAL
Certified System Health & Safety OHSAS 18001 SAI GLOBAL
Certified System Quality ISO 9001 SAI GLOBAL

We make every effort to ensure this item has been created from environmentally sustainable products. We only print what we need.

N13071 CE RoHS COMPLIANT

This publication is issued to provide information only which (unless agreed by Avara Technologies Pty. Ltd. in writing) may not be used, applied or reproduced for any purpose or form part of any order or contract or be regarded as a representation relating to the products or services concerned. Avara Technologies reserves the right to alter without notice the specification, design, price or conditions of supply of any product or service. © Avara Technologies Pty. Ltd. 2010